National Semiconductor

September 2001

LM340/LM78XX Series 3-Terminal Positive Regulators

General Description

The LM140/LM340A/LM340/LM7800C monolithic 3-terminal positive voltage regulators employ internal current-limiting, thermal shutdown and safe-area compensation, making them essentially indestructible. If adequate heat sinking is provided, they can deliver over 1.0A output current. They are intended as fixed voltage regulators in a wide range of applications including local (on-card) regulation for elimination of noise and distribution problems associated with single-point regulation. In addition to use as fixed voltage regulators, these devices can be used with external components to obtain adjustable output voltages and currents.

Considerable effort was expended to make the entire series of regulators easy to use and minimize the number of external components. It is not necessary to bypass the output, although this does improve transient response. Input bypassing is needed only if the regulator is located far from the filter capacitor of the power supply.

The 5V, 12V, and 15V regulator options are available in the steel TO-3 power package. The LM340A/LM340/LM7800C series is available in the TO-220 plastic power package, and the LM340-5.0 is available in the SOT-223 package, as well as the LM340-5.0 and LM340-12 in the surface-mount TO-263 package.

Features

- Complete specifications at 1A load
- Output voltage tolerances of ±2% at T_j = 25˚C and ±4% over the temperature range (LM340A)
- Line regulation of 0.01% of V_{OUT}/V of ΔV_{IN} at 1A load (LM340A)
- Load regulation of 0.3% of V_{OUT}/A (LM340A)
- Internal thermal overload protection
- Internal short-circuit current limit
- Output transistor safe area protection
- P^+ Product Enhancement tested

Device	Output Voltages	Packages
LM140	5, 12, 15	TO-3 (K)
LM340A/LM340	5, 12, 15	TO-3 (K), TO-220 (T), SOT-223 (MP), TO-263 (S) (5V and 12V only)
LM7800C	5, 8, 12, 15	TO-220 (T)

Typical Applications

Fixed Output Regulator

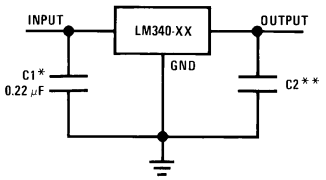

00778101

*Required if the regulator is located far from the power supply filter.

**Although no output capacitor is needed for stability, it does help transient response. (If needed, use 0.1 µF, ceramic disc).

Adjustable Output Regulator

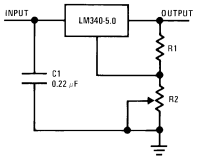

00778102

V_{OUT} = 5V + (5V/R1 + I_Q) R2 5V/R1 > 3 I_Q,
load regulation (L_r) ≈ [(R1 + R2)/R1] (L_r of LM340-5).

Current Regulator

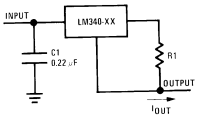

00778103

$$I_{OUT} = \frac{V2\text{-}3}{R1} + I_Q$$

ΔI_Q = 1.3 mA over line and load changes.

Comparison between SOT-223 and D-Pak (TO-252) Packages

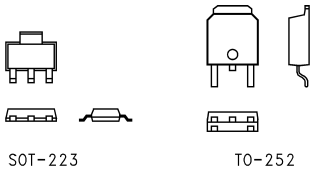

00778138

Scale 1:1

Absolute Maximum Ratings (Note 1)

If Military/Aerospace specified devices are required, please contact the National Semiconductor Sales Office/ Distributors for availability and specifications.

(Note 5)

DC Input Voltage	
All Devices except LM7824/LM7824C	35V
LM7824/LM7824C	40V
Internal Power Dissipation (Note 2)	Internally Limited
Maximum Junction Temperature	150˚C
Storage Temperature Range	−65˚C to +150˚C
Lead Temperature (Soldering, 10 sec.)	
TO-3 Package (K)	300˚C
TO-220 Package (T), TO-263 Package (S)	230˚C
ESD Susceptibility (Note 3)	2 kV

Operating Conditions (Note 1)

Temperature Range (T_A) (Note 2)	
LM140A, LM140	−55˚C to +125˚C
LM340A, LM340, LM7805C, LM7812C, LM7815C, LM7808C	0˚C to +125˚C

LM340A Electrical Characteristics

I_{OUT} = 1A, −55˚C ≤ T_J ≤ +150˚C (LM140A), or 0˚C ≤ T_J ≤ + 125˚C (LM340A) unless otherwise specified (Note 4)

Symbol	Output Voltage			5V			12V			15V			Units
	Input Voltage (unless otherwise noted)			10V			19V			23V			
	Parameter	Conditions		Min	Typ	Max	Min	Typ	Max	Min	Typ	Max	
V_O	Output Voltage	T_J = 25˚C		4.9	5	5.1	11.75	12	12.25	14.7	15	15.3	V
		P_D ≤ 15W, 5 mA ≤ I_O ≤ 1A		4.8		5.2	11.5		12.5	14.4		15.6	V
		V_{MIN} ≤ V_{IN} ≤ V_{MAX}		(7.5 ≤ V_{IN} ≤ 20)			(14.8 ≤ V_{IN} ≤ 27)			(17.9 ≤ V_{IN} ≤ 30)			V
ΔV_O	Line Regulation	I_O = 500 mA				10			18			22	mV
		ΔV_{IN}		(7.5 ≤ V_{IN} ≤ 20)			(14.8 ≤ V_{IN} ≤ 27)			(17.9 ≤ V_{IN} ≤ 30)			V
		T_J = 25˚C			3	10		4	18		4	22	mV
		ΔV_{IN}		(7.5 ≤ V_{IN} ≤ 20)			(14.5 ≤ V_{IN} ≤ 27)			(17.5 ≤ V_{IN} ≤ 30)			V
		T_J = 25˚C				4			9			10	mV
		Over Temperature				12			30			30	mV
		ΔV_{IN}		(8 ≤ V_{IN} ≤ 12)			(16 ≤ V_{IN} ≤ 22)			(20 ≤ V_{IN} ≤ 26)			V
ΔV_O	Load Regulation	T_J = 25˚C	5 mA ≤ I_O ≤ 1.5A		10	25		12	32		12	35	mV
			250 mA ≤ I_O ≤ 750 mA			15			19			21	mV
		Over Temperature, 5 mA ≤ I_O ≤ 1A				25			60			75	mV
I_Q	Quiescent Current	T_J = 25˚C				6			6			6	mA
		Over Temperature				6.5			6.5			6.5	mA
ΔI_Q	Quiescent Current Change	5 mA ≤ I_O ≤ 1A				0.5			0.5			0.5	mA
		T_J = 25˚C, I_O = 1A				0.8			0.8			0.8	mA
		V_{MIN} ≤ V_{IN} ≤ V_{MAX}		(7.5 ≤ V_{IN} ≤ 20)			(14.8 ≤ V_{IN} ≤ 27)			(17.9 ≤ V_{IN} ≤ 30)			V
		I_O = 500 mA				0.8			0.8			0.8	mA
		V_{MIN} ≤ V_{IN} ≤ V_{MAX}		(8 ≤ V_{IN} ≤ 25)			(15 ≤ V_{IN} ≤ 30)			(17.9 ≤ V_{IN} ≤ 30)			V
V_N	Output Noise Voltage	T_A = 25˚C, 10 Hz ≤ f ≤ 100 kHz			40			75			90		µV
$\frac{\Delta V_{IN}}{\Delta V_{OUT}}$	Ripple Rejection	T_J = 25˚C, f = 120 Hz, I_O = 1A		68	80		61	72		60	70		dB
		or f = 120 Hz, I_O = 500 mA, Over Temperature,		68			61			60			dB
		V_{MIN} ≤ V_{IN} ≤ V_{MAX}		(8 ≤ V_{IN} ≤ 18)			(15 ≤ V_{IN} ≤ 25)			(18.5 ≤ V_{IN} ≤ 28.5)			V
R_O	Dropout Voltage	T_J = 25˚C, I_O = 1A			2.0			2.0			2.0		V
	Output Resistance	f = 1 kHz			8			18			19		mΩ

LM340A Electrical Characteristics (Continued)

I_{OUT} = 1A, −55˚C ≤ T_J ≤ +150˚C (LM140A), or 0˚C ≤ T_J ≤ + 125˚C (LM340A) unless otherwise specified (Note 4)

Symbol	Output Voltage		5V			12V			15V			Units
	Input Voltage (unless otherwise noted)		10V			19V			23V			
	Parameter	Conditions	Min	Typ	Max	Min	Typ	Max	Min	Typ	Max	
	Short-Circuit Current	T_J = 25˚C		2.1			1.5			1.2		A
	Peak Output Current	T_J = 25˚C		2.4			2.4			2.4		A
	Average TC of V_O	Min, T_J = 0˚C, I_O = 5 mA		−0.6			−1.5			−1.8		mV/˚C
V_{IN}	Input Voltage Required to Maintain Line Regulation	T_J = 25˚C	7.5			14.5			17.5			V

LM140 Electrical Characteristics (Note 4)

−55˚C ≤ T_J ≤ +150˚C unless otherwise specified

Symbol	Output Voltage			5V			12V			15V			Units
	Input Voltage (unless otherwise noted)			10V			19V			23V			
	Parameter	Conditions		Min	Typ	Max	Min	Typ	Max	Min	Typ	Max	
V_O	Output Voltage	T_J = 25˚C, 5 mA ≤ I_O ≤ 1A		4.8	5	5.2	11.5	12	12.5	14.4	15	15.6	V
		P_D ≤ 15W, 5 mA ≤ I_O ≤ 1A		4.75		5.25	11.4		12.6	14.25		15.75	V
		V_{MIN} ≤ V_{IN} ≤ V_{MAX}		(8 ≤ V_{IN} ≤ 20)			(15.5 ≤ V_{IN} ≤ 27)			(18.5 ≤ V_{IN} ≤ 30)			V
ΔV_O	Line Regulation	I_O = 500 mA	T_J = 25˚C		3	50		4	120		4	150	mV
			ΔV_{IN}	(7 ≤ V_{IN} ≤ 25)			(14.5 ≤ V_{IN} ≤ 30)			(17.5 ≤ V_{IN} ≤ 30)			V
			−55˚C ≤ T_J ≤ +150˚C			50			120			150	mV
			ΔV_{IN}	(8 ≤ V_{IN} ≤ 20)			(15 ≤ V_{IN} ≤ 27)			(18.5 ≤ V_{IN} ≤ 30)			V
		I_O ≤ 1A	T_J = 25˚C			50			120			150	mV
			ΔV_{IN}	(7.5 ≤ V_{IN} ≤ 20)			(14.6 ≤ V_{IN} ≤ 27)			(17.7 ≤ V_{IN} ≤ 30)			V
			−55˚C ≤ T_J ≤ +150˚C			25			60			75	mV
			ΔV_{IN}	(8 ≤ V_{IN} ≤ 12)			(16 ≤ V_{IN} ≤ 22)			(20 ≤ V_{IN} ≤ 26)			V
ΔV_O	Load Regulation	T_J = 25˚C	5 mA ≤ I_O ≤ 1.5A		10	50		12	120		12	150	mV
			250 mA ≤ I_P ≤ 750 mA			25			60			75	mV
		−55˚C ≤ T_J ≤ +150˚C, 5 mA ≤ I_O ≤ 1A				50			120			150	mV
I_Q	Quiescent Current	I_O ≤ 1A	T_J = 25˚C			6			6			6	mA
			−55˚C ≤ T_J ≤ +150˚C			7			7			7	mA
ΔI_Q	Quiescent Current Change	5 mA ≤ I_O ≤ 1A				0.5			0.5			0.5	mA
		T_J = 25˚C, I_O ≤ 1A				0.8			0.8			0.8	mA
		V_{MIN} ≤ V_{IN} ≤ V_{MAX}		(8 ≤ V_{IN} ≤ 20)			(15 ≤ V_{IN} ≤ 27)			(18.5 ≤ V_{IN} ≤ 30)			V
		I_O = 500 mA, −55˚C ≤ T_J ≤ +150˚C				0.8			0.8			0.8	mA
		V_{MIN} ≤ V_{IN} ≤ V_{MAX}		(8 ≤ V_{IN} ≤ 25)			(15 ≤ V_{IN} ≤ 30)			(18.5 ≤ V_{IN} ≤ 30)			V
V_N	Output Noise Voltage	T_A = 25˚C, 10 Hz ≤ f ≤ 100 kHz			40			75			90		µV

LM140 Electrical Characteristics (Note 4) (Continued)

−55˚C ≤ T_J ≤ +150˚C unless otherwise specified

Symbol	Output Voltage			5V			12V			15V			Units
	Input Voltage (unless otherwise noted)			10V			19V			23V			
	Parameter	Conditions		Min	Typ	Max	Min	Typ	Max	Min	Typ	Max	
$\frac{\Delta V_{IN}}{\Delta V_{OUT}}$	Ripple Rejection	f = 120 Hz	I_O ≤ 1A, T_J = 25˚C or	68	80		61	72		60	70		dB
			I_O ≤ 500 mA, −55˚C ≤ T_J ≤+150˚C	68			61			60			dB
		V_{MIN} ≤ V_{IN} ≤ V_{MAX}		(8 ≤ V_{IN} ≤ 18)			(15 ≤ V_{IN} ≤ 25)			(18.5 ≤ V_{IN} ≤ 28.5)			V
R_O	Dropout Voltage	T_J = 25˚C, I_O = 1A			2.0			2.0			2.0		V
	Output Resistance	f = 1 kHz			8			18			19		mΩ
	Short-Circuit Current	T_J = 25˚C			2.1			1.5			1.2		A
	Peak Output Current	T_J = 25˚C			2.4			2.4			2.4		A
	Average TC of V_{OUT}	0˚C ≤ T_J ≤ +150˚C, I_O = 5 mA			−0.6			−1.5			−1.8		mV/˚C
V_{IN}	Input Voltage Required to Maintain Line Regulation	T_J = 25˚C, I_O ≤ 1A		7.5			14.6			17.7			V

LM340/LM7800C Electrical Characteristics (Note 4)

0˚C ≤ T_J ≤ +125˚C unless otherwise specified

Symbol	Output Voltage			5V			12V			15V			Units
	Input Voltage (unless otherwise noted)			10V			19V			23V			
	Parameter	Conditions		Min	Typ	Max	Min	Typ	Max	Min	Typ	Max	
V_O	Output Voltage	T_J = 25˚C, 5 mA ≤ I_O ≤ 1A		4.8	5	5.2	11.5	12	12.5	14.4	15	15.6	V
		P_D ≤ 15W, 5 mA ≤ I_O ≤ 1A		4.75		5.25	11.4		12.6	14.25		15.75	V
		V_{MIN} ≤ V_{IN} ≤ V_{MAX}		(7.5 ≤ V_{IN} ≤ 20)			(14.5 ≤ V_{IN} ≤ 27)			(17.5 ≤ V_{IN} ≤ 30)			V
ΔV_O	Line Regulation	I_O = 500 mA	T_J = 25˚C		3	50		4	120		4	150	mV
			ΔV_{IN}	(7 ≤ V_{IN} ≤ 25)			(14.5 ≤ V_{IN} ≤ 30)			(17.5 ≤ V_{IN} ≤ 30)			V
			0˚C ≤ T_J ≤ +125˚C			50			120			150	mV
			ΔV_{IN}	(8 ≤ V_{IN} ≤ 20)			(15 ≤ V_{IN} ≤ 27)			(18.5 ≤ V_{IN} ≤ 30)			V
		I_O ≤ 1A	T_J = 25˚C			50			120			150	mV
			ΔV_{IN}	(7.5 ≤ V_{IN} ≤ 20)			(14.6 ≤ V_{IN} ≤ 27)			(17.7 ≤ V_{IN} ≤ 30)			V
			0˚C ≤ T_J ≤ +125˚C			25			60			75	mV
			ΔV_{IN}	(8 ≤ V_{IN} ≤ 12)			(16 ≤ V_{IN} ≤ 22)			(20 ≤ V_{IN} ≤ 26)			V
ΔV_O	Load Regulation	T_J = 25˚C	5 mA ≤ I_O ≤ 1.5A		10	50		12	120		12	150	mV
			250 mA ≤ I_O ≤ 750 mA			25			60			75	mV
		5 mA ≤ I_O ≤ 1A, 0˚C ≤ T_J ≤ +125˚C				50			120			150	mV
I_Q	Quiescent Current	I_O ≤ 1A	T_J = 25˚C			8			8			8	mA
			0˚C ≤ T_J ≤ +125˚C			8.5			8.5			8.5	mA
ΔI_Q	Quiescent Current Change	5 mA ≤ I_O ≤ 1A				0.5			0.5			0.5	mA
		T_J = 25˚C, I_O ≤ 1A				1.0			1.0			1.0	mA
		V_{MIN} ≤ V_{IN} ≤ V_{MAX}		(7.5 ≤ V_{IN} ≤ 20)			(14.8 ≤ V_{IN} ≤ 27)			(17.9 ≤ V_{IN} ≤ 30)			V

LM340/LM7800C Electrical Characteristics (Note 4) (Continued)

$0^\circ C \le T_J \le +125^\circ C$ unless otherwise specified

Symbol	Output Voltage			5V			12V			15V			Units
	Input Voltage (unless otherwise noted)			10V			19V			23V			
	Parameter	Conditions		Min	Typ	Max	Min	Typ	Max	Min	Typ	Max	
		$I_O \le 500$ mA, $0^\circ C \le T_J \le +125^\circ C$				1.0			1.0			1.0	mA
		$V_{MIN} \le V_{IN} \le V_{MAX}$			$(7 \le V_{IN} \le 25)$			$(14.5 \le V_{IN} \le 30)$			$(17.5 \le V_{IN} \le 30)$		V
V_N	Output Noise Voltage	$T_A = 25^\circ C$, 10 Hz ≤ f ≤ 100 kHz			40			75			90		μV
$\frac{\Delta V_{IN}}{\Delta V_{OUT}}$	Ripple Rejection	f = 120 Hz	$I_O \le 1A$, $T_J = 25^\circ C$	62	80		55	72		54	70		dB
			or $I_O \le 500$ mA, $0^\circ C \le T_J \le +125^\circ C$	62			55			54			dB
		$V_{MIN} \le V_{IN} \le V_{MAX}$			$(8 \le V_{IN} \le 18)$			$(15 \le V_{IN} \le 25)$			$(18.5 \le V_{IN} \le 28.5)$		V
R_O	Dropout Voltage	$T_J = 25^\circ C$, $I_O = 1A$			2.0			2.0			2.0		V
	Output Resistance	f = 1 kHz			8			18			19		mΩ
	Short-Circuit Current	$T_J = 25^\circ C$			2.1			1.5			1.2		A
	Peak Output Current	$T_J = 25^\circ C$			2.4			2.4			2.4		A
	Average TC of V_{OUT}	$0^\circ C \le T_J \le +125^\circ C$, $I_O = 5$ mA			−0.6			−1.5			−1.8		mV/°C
V_{IN}	Input Voltage Required to Maintain Line Regulation	$T_J = 25^\circ C$, $I_O \le 1A$		7.5			14.6			17.7			V

Note 1: Absolute Maximum Ratings are limits beyond which damage to the device may occur. Operating Conditions are conditions under which the device functions but the specifications might not be guaranteed. For guaranteed specifications and test conditions see the Electrical Characteristics.

Note 2: The maximum allowable power dissipation at any ambient temperature is a function of the maximum junction temperature for operation (T_{JMAX} = 125°C or 150°C), the junction-to-ambient thermal resistance (θ_{JA}), and the ambient temperature (T_A). $P_{DMAX} = (T_{JMAX} - T_A)/\theta_{JA}$. If this dissipation is exceeded, the die temperature will rise above T_{JMAX} and the electrical specifications do not apply. If the die temperature rises above 150°C, the device will go into thermal shutdown. For the TO-3 package (K, KC), the junction-to-ambient thermal resistance (θ_{JA}) is 39°C/W. When using a heatsink, θ_{JA} is the sum of the 4°C/W junction-to-case thermal resistance (θ_{JC}) of the TO-3 package and the case-to-ambient thermal resistance of the heatsink. For the TO-220 package (T), θ_{JA} is 54°C/W and θ_{JC} is 4°C/W. If SOT-223 is used, the junction-to-ambient thermal resistance is 174°C/W and can be reduced by a heatsink (see Applications Hints on heatsinking).

If the TO-263 package is used, the thermal resistance can be reduced by increasing the PC board copper area thermally connected to the package: Using 0.5 square inches of copper area, θ_{JA} is 50°C/W; with 1 square inch of copper area, $\theta_{JA}$is 37°C/W; and with 1.6 or more inches of copper area, θ_{JA} is 32°C/W.

Note 3: ESD rating is based on the human body model, 100 pF discharged through 1.5 kΩ.

Note 4: All characteristics are measured with a 0.22 μF capacitor from input to ground and a 0.1 μF capacitor from output to ground. All characteristics except noise voltage and ripple rejection ratio are measured using pulse techniques ($t_w \le 10$ ms, duty cycle ≤ 5%). Output voltage changes due to changes in internal temperature must be taken into account separately.

Note 5: A military RETS specification is available on request. At the time of printing, the military RETS specifications for the LM140AK-5.0/883, LM140AK-12/883, and LM140AK-15/883 complied with the min and max limits for the respective versions of the LM140A. At the time of printing, the military RETS specifications for the LM140K-5.0/883, LM140K-12/883, and LM140K-15/883 complied with the min and max limits for the respective versions of the LM140. The LM140H/883, LM140K/883, and LM140AK/883 may also be procured as a Standard Military Drawing.

LM7808C
Electrical Characteristics

$0^{\circ}C \le T_J \le +150^{\circ}C$, V_I = 14V, I_O = 500 mA, C_I = 0.33 µF, C_O = 0.1 µF, unless otherwise specified

Symbol	Parameter		Conditions (Note 6)		LM7808C			Units
					Min	Typ	Max	
V_O	Output Voltage		$T_J = 25^{\circ}C$		7.7	8.0	8.3	V
ΔV_O	Line Regulation		$T_J = 25^{\circ}C$	$10.5V \le V_I \le 25V$		6.0	160	mV
				$11.0V \le V_I \le 17V$		2.0	80	
ΔV_O	Load Regulation		$T_J = 25^{\circ}C$	$5.0\ mA \le I_O \le 1.5A$		12	160	mV
				$250\ mA \le I_O \le 750$ mA		4.0	80	
V_O	Output Voltage		$11.5V \le V_I \le 23V$, $5.0\ mA \le I_O \le 1.0A$, $P \le 15W$		7.6		8.4	V
I_Q	Quiescent Current		$T_J = 25^{\circ}C$			4.3	8.0	mA
ΔI_Q	Quiescent Current Change	With Line	$11.5V \le V_I \le 25V$				1.0	mA
		With Load	$5.0\ mA \le I_O \le 1.0A$				0.5	
V_N	Noise		$T_A = 25^{\circ}C$, $10\ Hz \le f \le 100\ kHz$			52		µV
$\Delta V_I/\Delta V_O$	Ripple Rejection		f = 120 Hz, I_O = 350 mA, $T_J = 25^{\circ}C$		56	72		dB
V_{DO}	Dropout Voltage		I_O = 1.0A, $T_J = 25^{\circ}C$			2.0		V
R_O	Output Resistance		f = 1.0 kHz			16		mΩ
I_{OS}	Output Short Circuit Current		$T_J = 25^{\circ}C$, V_I = 35V			0.45		A
I_{PK}	Peak Output Current		$T_J = 25^{\circ}C$			2.2		A
$\Delta V_O/\Delta T$	Average Temperature Coefficient of Output Voltage		I_O = 5.0 mA			0.8		mV/°C

Note 6: All characteristics are measured with a 0.22 µF capacitor from input to ground and a 0.1 µF capacitor from output to ground. All characteristics except noise voltage and ripple rejection ratio are measured using pulse techniques ($t_w \le 10$ ms, duty cycle ≤ 5%). Output voltage changes due to changes in internal temperature must be taken into account separately.

Typical Performance Characteristics

Maximum Average Power Dissipation

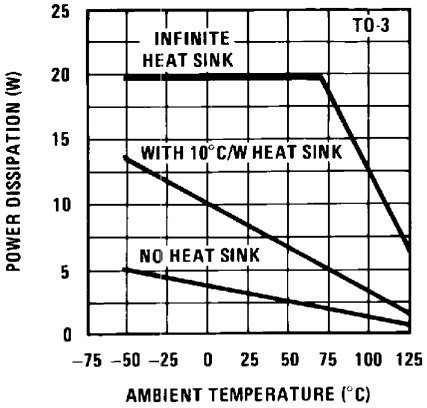

00778122

Maximum Average Power Dissipation

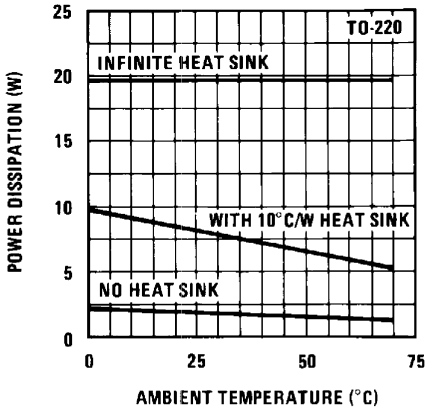

00778123

Maximum Power Dissipation (TO-263) (See Note 2)

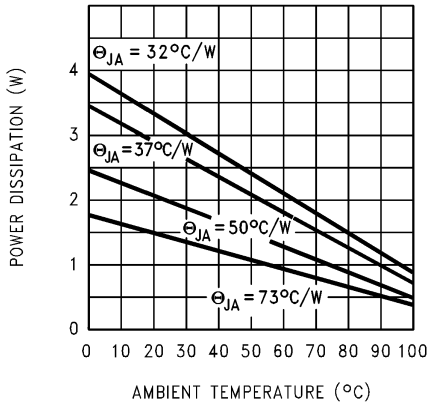

00778124

Output Voltage (Normalized to 1V at T_J = 25°C)

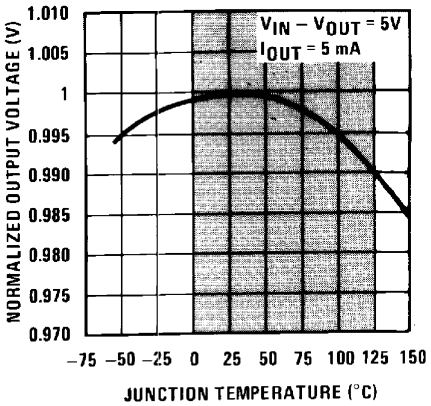

00778125

Note: Shaded area refers to LM340A/LM340, LM7805C, LM7812C and LM7815C.

Ripple Rejection

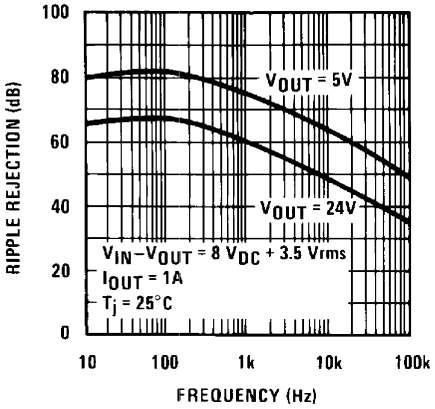

00778126

Ripple Rejection

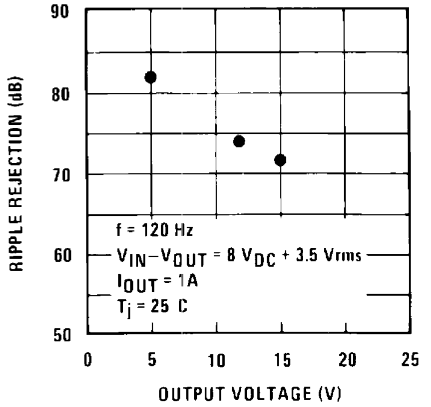

00778127

Typical Performance Characteristics (Continued)

Output Impedance

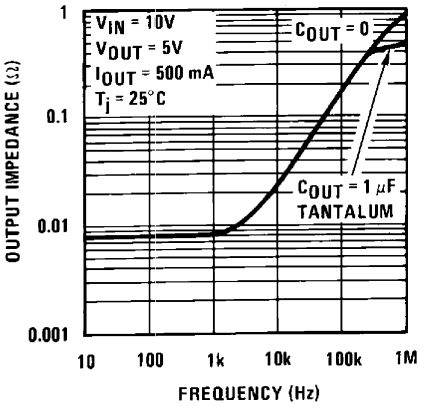

00778128

Dropout Characteristics

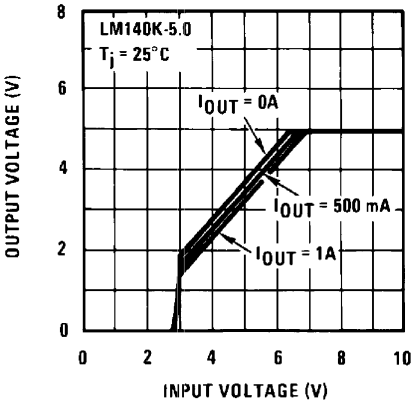

00778129

Quiescent Current

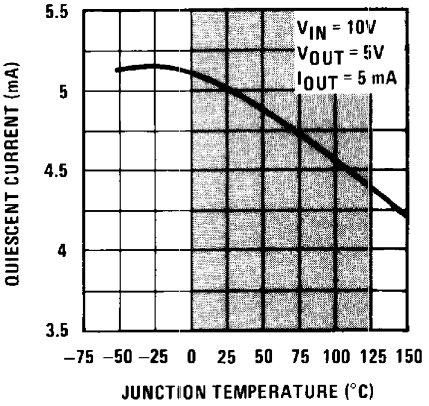

00778130

Note: Shaded area refers to LM340A/LM340, LM7805C, LM7812C and LM7815C.

Peak Output Current

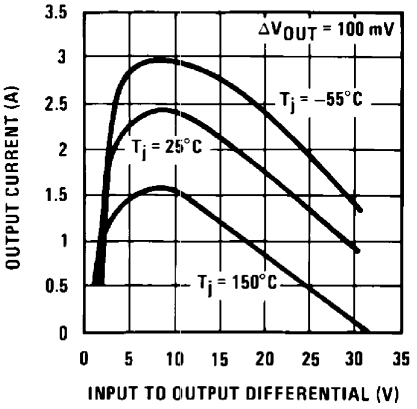

00778131

Dropout Voltage

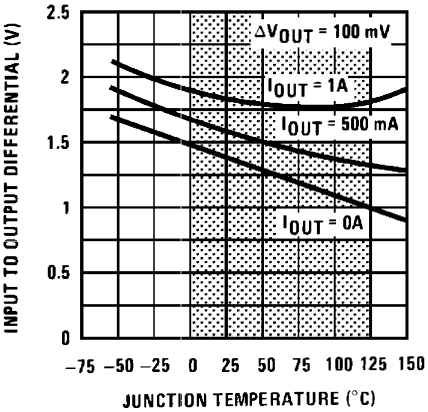

00778132

Note: Shaded area refers to LM340A/LM340, LM7805C, LM7812C and LM7815C.

Quiescent Current

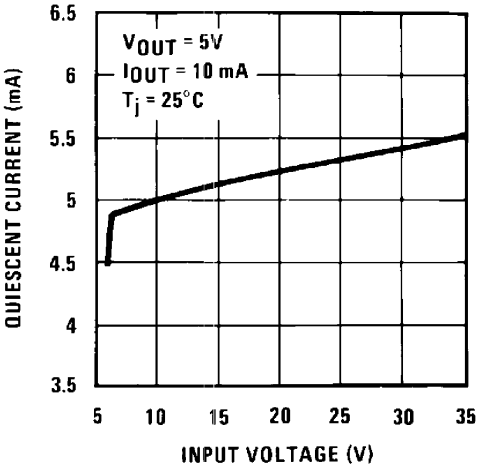

00778133

Line Regulation
140AK-5.0, I_{OUT} = 1A, T_A = 25˚C

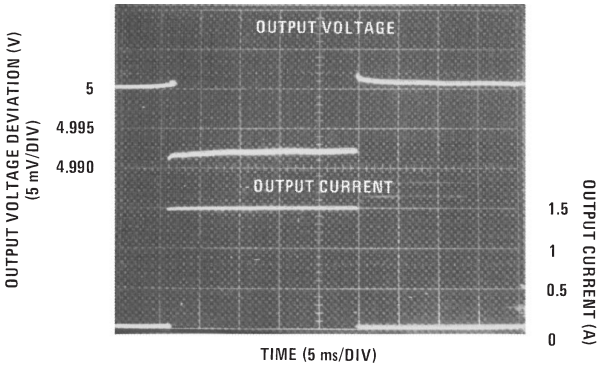

00778105

Line Regulation
140AK-5.0, V_{IN} = 10V, T_A = 25˚C

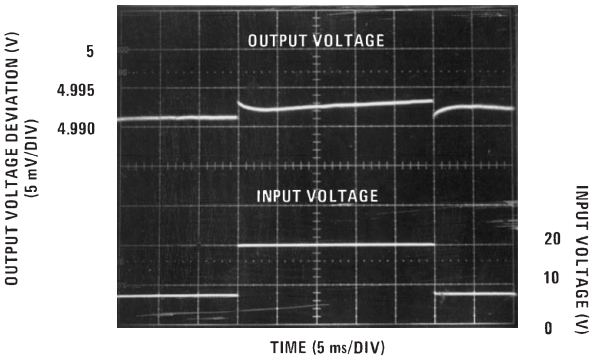

00778106

Equivalent Schematic

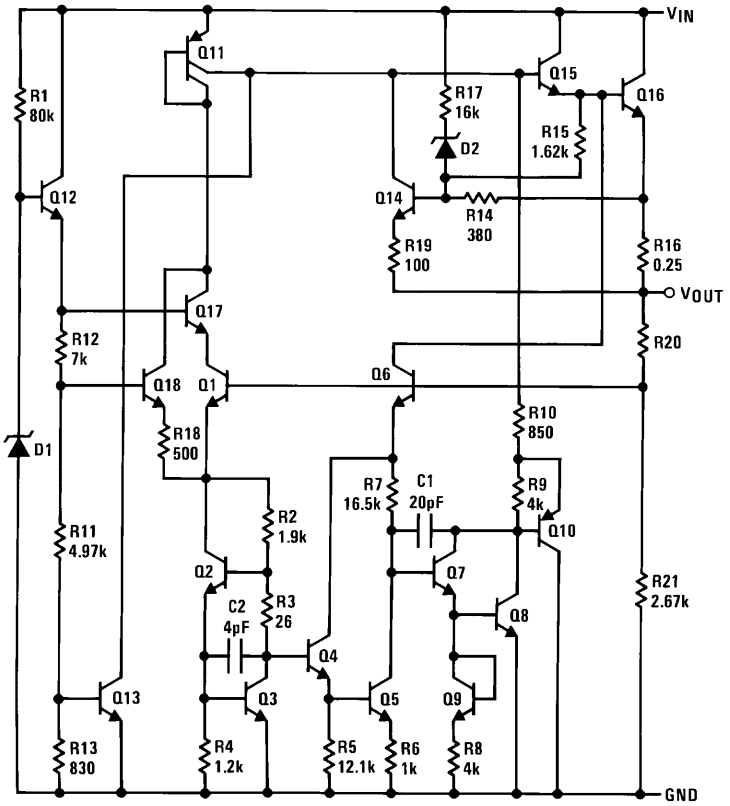

00778107

Application Hints

The LM340/LM78XX series is designed with thermal protection, output short-circuit protection and output transistor safe area protection. However, as with *any* IC regulator, it becomes necessary to take precautions to assure that the regulator is not inadvertently damaged. The following describes possible misapplications and methods to prevent damage to the regulator.

Shorting the Regulator Input: When using large capacitors at the output of these regulators, a protection diode connected input to output (*Figure 1*) may be required if the input is shorted to ground. Without the protection diode, an input short will cause the input to rapidly approach ground potential, while the output remains near the initial V_{OUT}because of the stored charge in the large output capacitor. The capacitor will then discharge through a large internal input to output diode and parasitic transistors. If the energy released by the capacitor is large enough, this diode, low current metal and the regulator will be destroyed. The fast diode in *Figure 1* will shunt most of the capacitors discharge current around the regulator. Generally no protection diode is required for values of output capacitance ≤ 10 µF.

Raising the Output Voltage above the Input Voltage: Since the output of the device does not sink current, forcing the output high can cause damage to internal low current paths in a manner similar to that just described in the “Shorting the Regulator Input” section.

Application Hints (Continued)

Regulator Floating Ground (*Figure 2*): When the ground pin alone becomes disconnected, the output approaches the unregulated input, causing possible damage to other circuits connected to V_{OUT}. If ground is reconnected with power "ON", damage may also occur to the regulator. This fault is most likely to occur when plugging in regulators or modules with on card regulators into powered up sockets. Power should be turned off first, thermal limit ceases operating, or ground should be connected first if power must be left on.

Transient Voltages: If transients exceed the maximum rated input voltage of the device, or reach more than 0.8V below ground and have sufficient energy, they will damage the regulator. The solution is to use a large input capacitor, a series input breakdown diode, a choke, a transient suppressor or a combination of these.

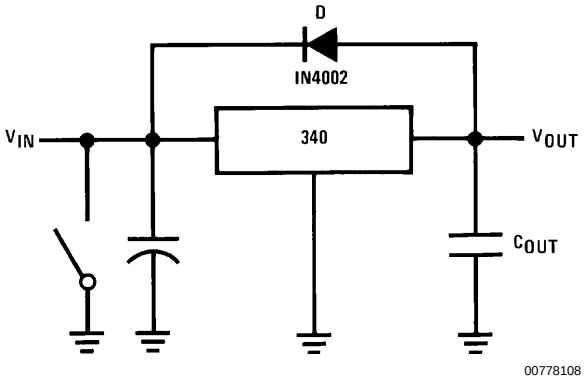

FIGURE 1. Input Short

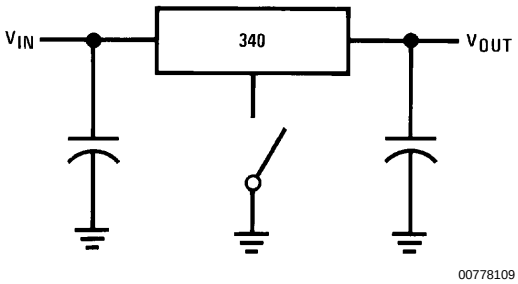

FIGURE 2. Regulator Floating Ground

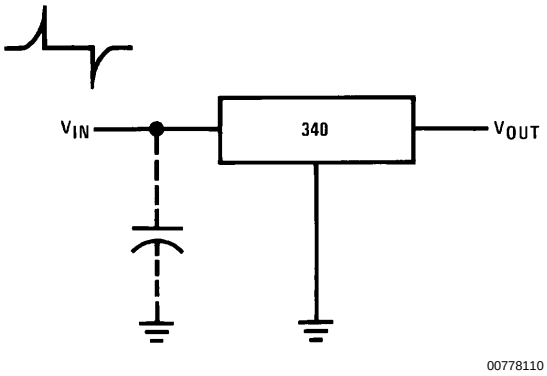

FIGURE 3. Transients

When a value for $\theta_{(H-A)}$ is found using the equation shown, a heatsink must be selected that has *a value that is less than or equal to this number.*

$\theta_{(H-A)}$ is specified numerically by the heatsink manufacturer in this catalog, or shown in a curve that plots temperature rise vs power dissipation for the heatsink.

HEATSINKING TO-263 AND SOT-223 PACKAGE PARTS

Both the TO-263 ("S") and SOT-223 ("MP") packages use a copper plane on the PCB and the PCB itself as a heatsink. To optimize the heat sinking ability of the plane and PCB, solder the tab of the plane.

shows for the TO-263 the measured values of $\theta_{(J-A)}$ for different copper area sizes using a typical PCB with 1 ounce copper *and no solder mask over the copper area used for heatsinking.*

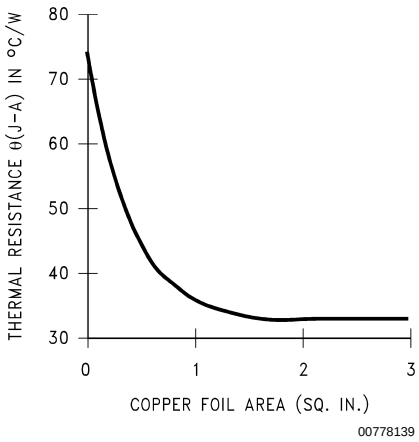

FIGURE 4. $\theta_{(J-A)}$ vs Copper (1 ounce) Area for the TO-263 Package

As shown in the figure, increasing the copper area beyond 1 square inch produces very little improvement. It should also be observed that the minimum value of $\theta_{(J-A)}$ for the TO-263 package mounted to a PCB is 32˚C/W.

As a design aid, *Figure 5* shows the maximum allowable power dissipation compared to ambient temperature for the TO-263 device (assuming $\theta_{(J-A)}$ is 35˚C/W and the maximum junction temperature is 125˚C).

Application Hints (Continued)

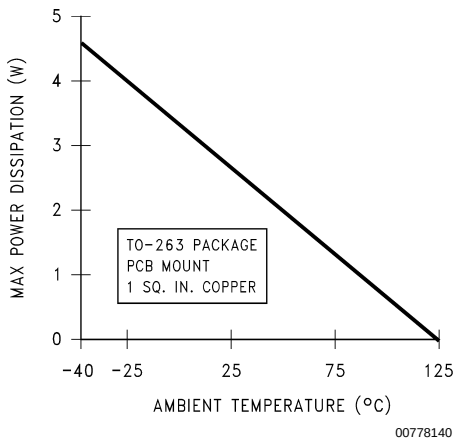

FIGURE 5. Maximum Power Dissipation vs T_{AMB} for the TO-263 Package

Figures 6, 7 show the information for the SOT-223 package. *Figure 6* assumes a $\theta_{(J-A)}$ of 74˚C/W for 1 ounce copper and 51˚C/W for 2 ounce copper and a maximum junction temperature of 125˚C.

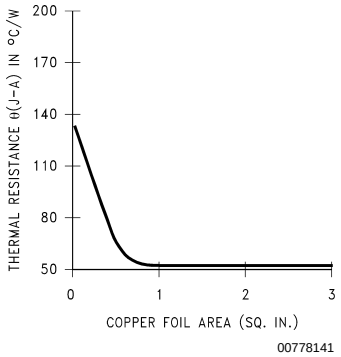

FIGURE 6. $\theta_{(J-A)}$ vs Copper (2 ounce) Area for the SOT-223 Package

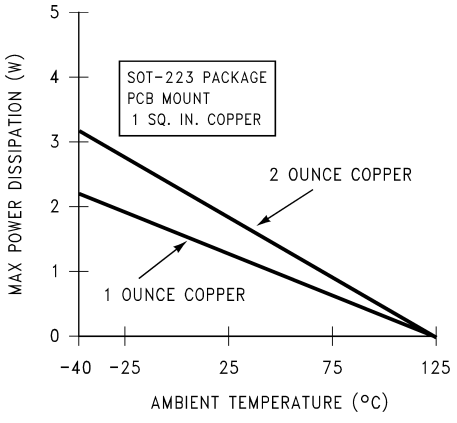

Please see AN-1028 for power enhancement techniques to be used with the SOT-223 package.

FIGURE 7. Maximum Power Dissipation vs T_{AMB} for the SOT-223 Package

Typical Applications

Fixed Output Regulator

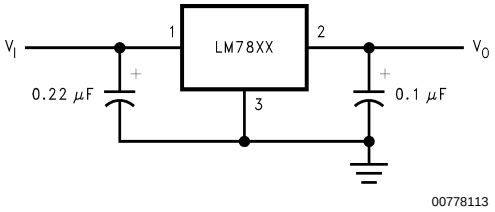

Note: Bypass capacitors are recommended for optimum stability and transient response, and should be located as close as possible to the regulator.

High Input Voltage Circuits

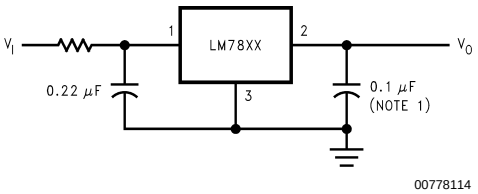

Typical Applications (Continued)

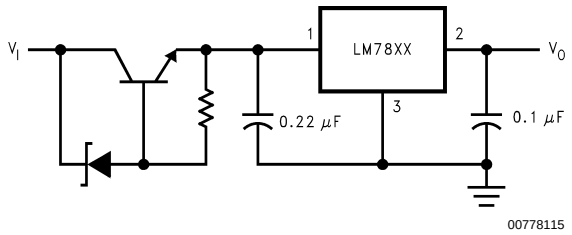

High Current Voltage Regulator

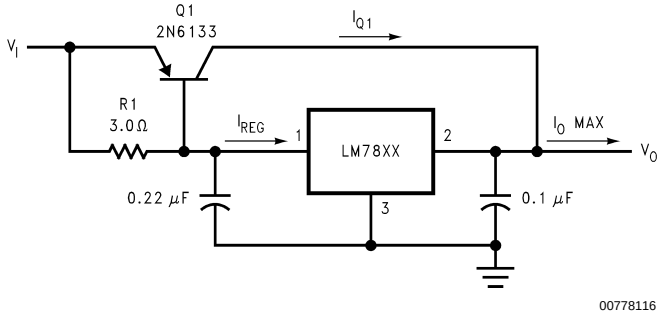

$$\beta(Q1) \geq \frac{I_{O\ Max}}{I_{REG\ Max}}$$

$$R1 = \frac{0.9}{I_{REG}} = \frac{\beta(Q1)\ V_{BE(Q1)}}{I_{REG\ Max}\ (\beta + 1) - I_{O\ Max}}$$

High Output Current, Short Circuit Protected

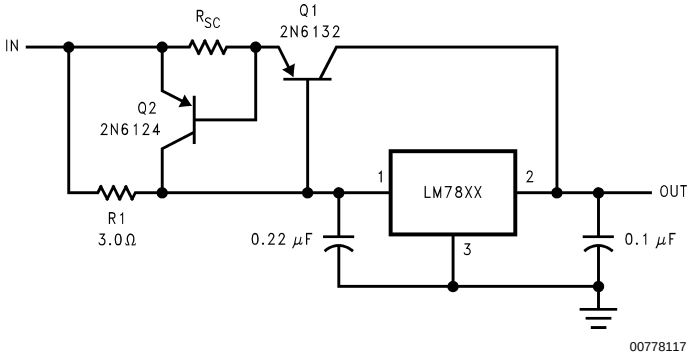

$$R_{SC} = \frac{0.8}{I_{SC}}$$

$$R1 = \frac{\beta V_{BE(Q1)}}{I_{REG\ Max}\ (\beta + 1) - I_{O\ Max}}$$

Typical Applications (Continued)

Positive and Negative Regulator

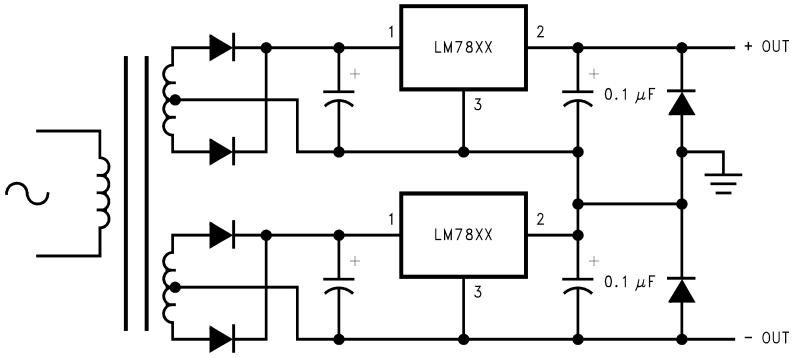

00778118

Connection Diagrams and Ordering Information

TO-3 Metal Can Package (K)

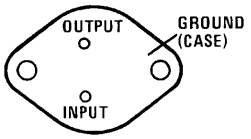

00778111

Bottom View
Steel Package Order Numbers:
LM140K-5.0 LM140K-12 LM140K-15
LM340K-12 LM340K-15
LM340K-5.0
See Package Number K02A
LM140K-5.0/883 LM140K-12/883 LM140K-15/883
See Package Number K02C

TO-220 Power Package (T)

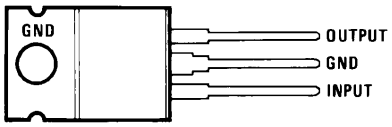

00778112

Top View
Plastic Package Order Numbers:
LM340AT-5.0 LM340T-5.0
LM340T-12 LM340T-15
LM7805CT LM7812CT
LM7815CT LM7808CT
See Package Number T03B

TO-39 Metal Can Package (H)

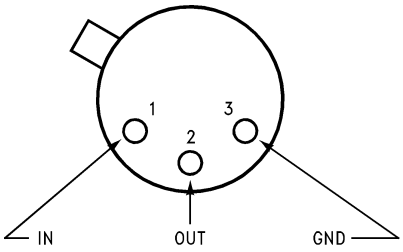

00778119

Top View
Metal Can Order Numbers†:
LM140H-5.0/883 LM140H-6.0/883
LM140H-8.0/883 LM140H-12/883
LM140H-15/883 LM140H-24/883
See Package Number H03A

Connection Diagrams and Ordering Information (Continued)

TO-263 Surface-Mount Package (S)

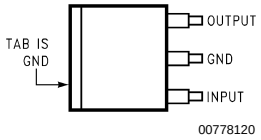

Top View

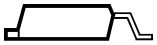

Side View
Surface-Mount Package Order Numbers:
LM340S-5.0 LM340S-12
See Package Number TS3B

3-Lead SOT-223
(Front View)
Order Number LM340MP-5.0
Package Marked NO0A
See Package Number MA04A

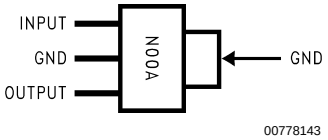

†The specifications for the LM140H/883 devices are not contained in this datasheet. If specifications for these devices are required, contact the National Semiconductor Sales Office/Distributors.

Physical Dimensions inches (millimeters)

unless otherwise noted

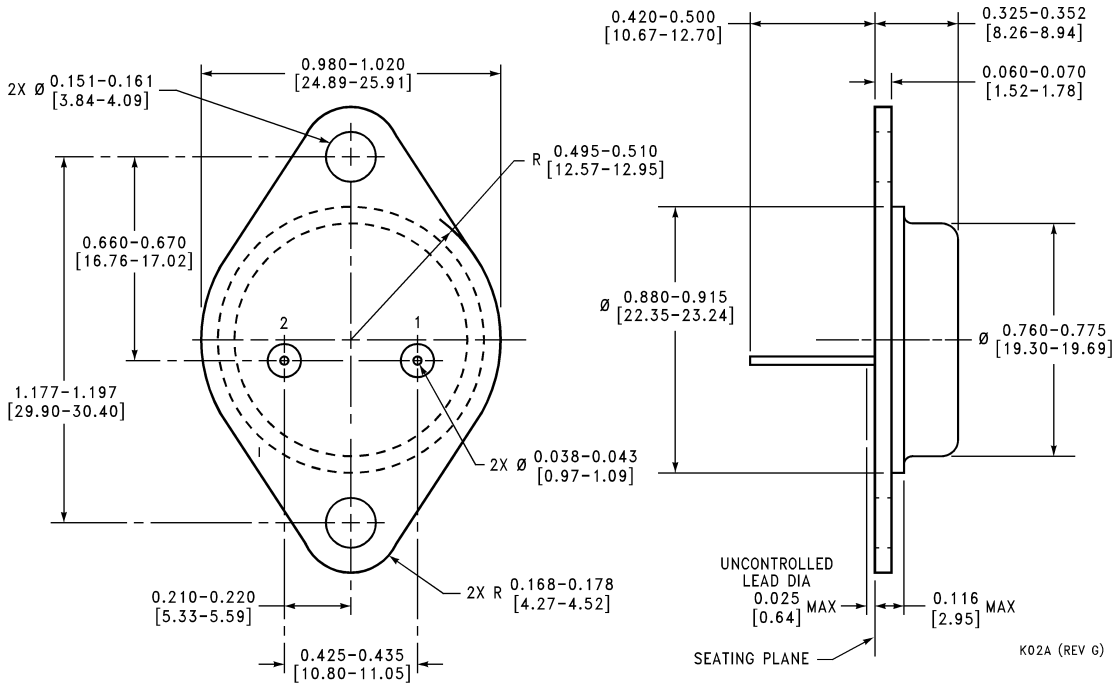

TO-3 Metal Can Package (K)
Order Number LM140K-5.0, LM340K-5.0, LM140K-12, LM340K-12, LM140K-15, LM340K-15, LM7806CK, LM7808CK, LM7818CK or LM7824CK
NS Package Number K02A

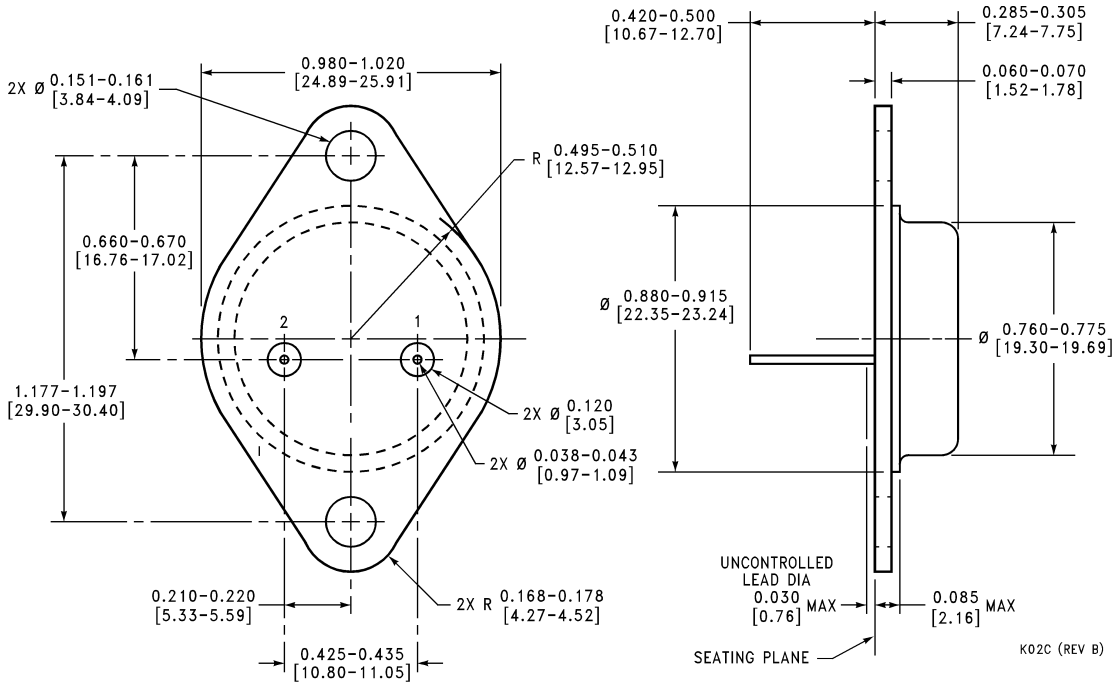

TO-3 Metal Can Package (K)
Mil-Aero Products
Order Number LM140K-5.0/883, LM140K-12/883, or LM140K-15/883
NS Package Number K02C

Physical Dimensions inches (millimeters) unless otherwise noted (Continued)

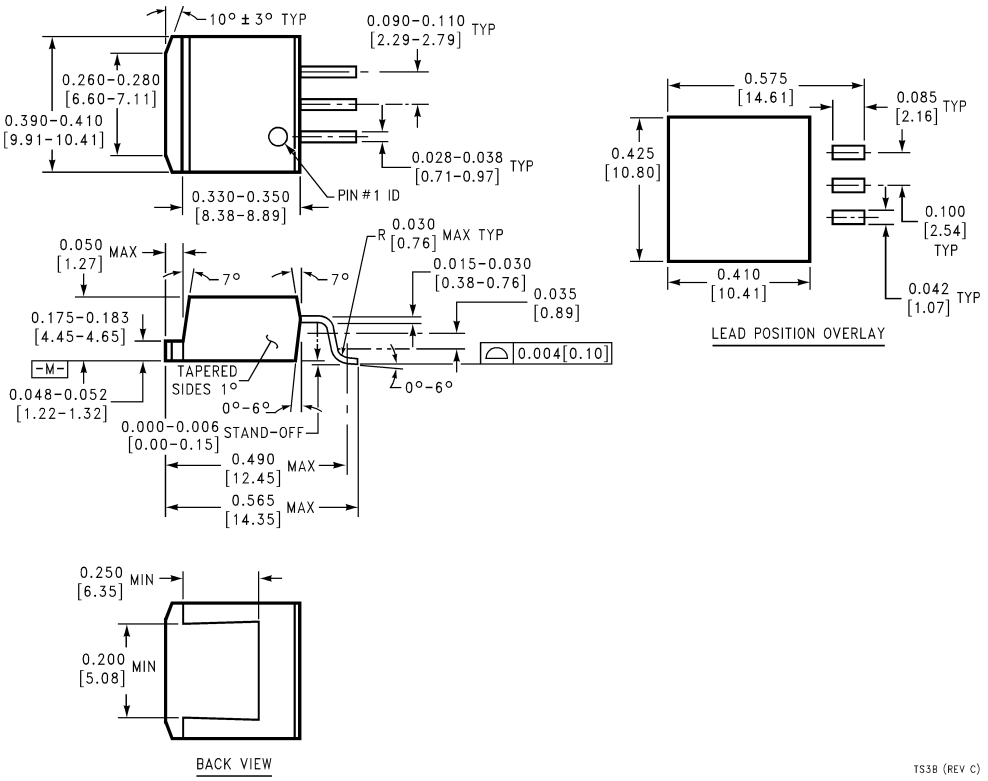

TO-263 Surface-Mount Package (S)
Order Number LM340S-5.0 or LM340S-12
NS Package Number TS3B

Physical Dimensions inches (millimeters) unless otherwise noted (Continued)

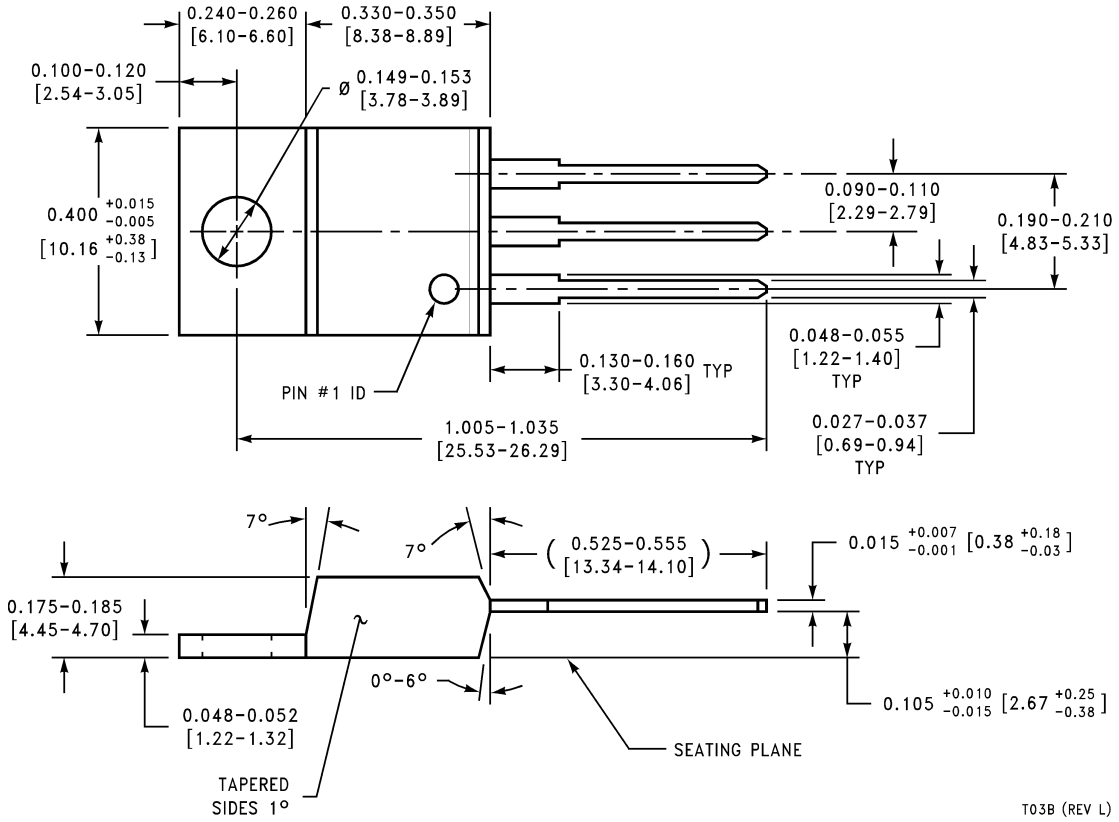

TO-220 Power Package (T)
Order Number LM340AT/LM340T-5.0, LM340AT/LM340T-12, LM340AT/LM340T-15, LM7805CT, LM7812CT, LM7815CT, LM7806CT, LM7808CT, LM7818CT or LM7824CT
NS Package Number T03B

Physical Dimensions inches (millimeters) unless otherwise noted (Continued)

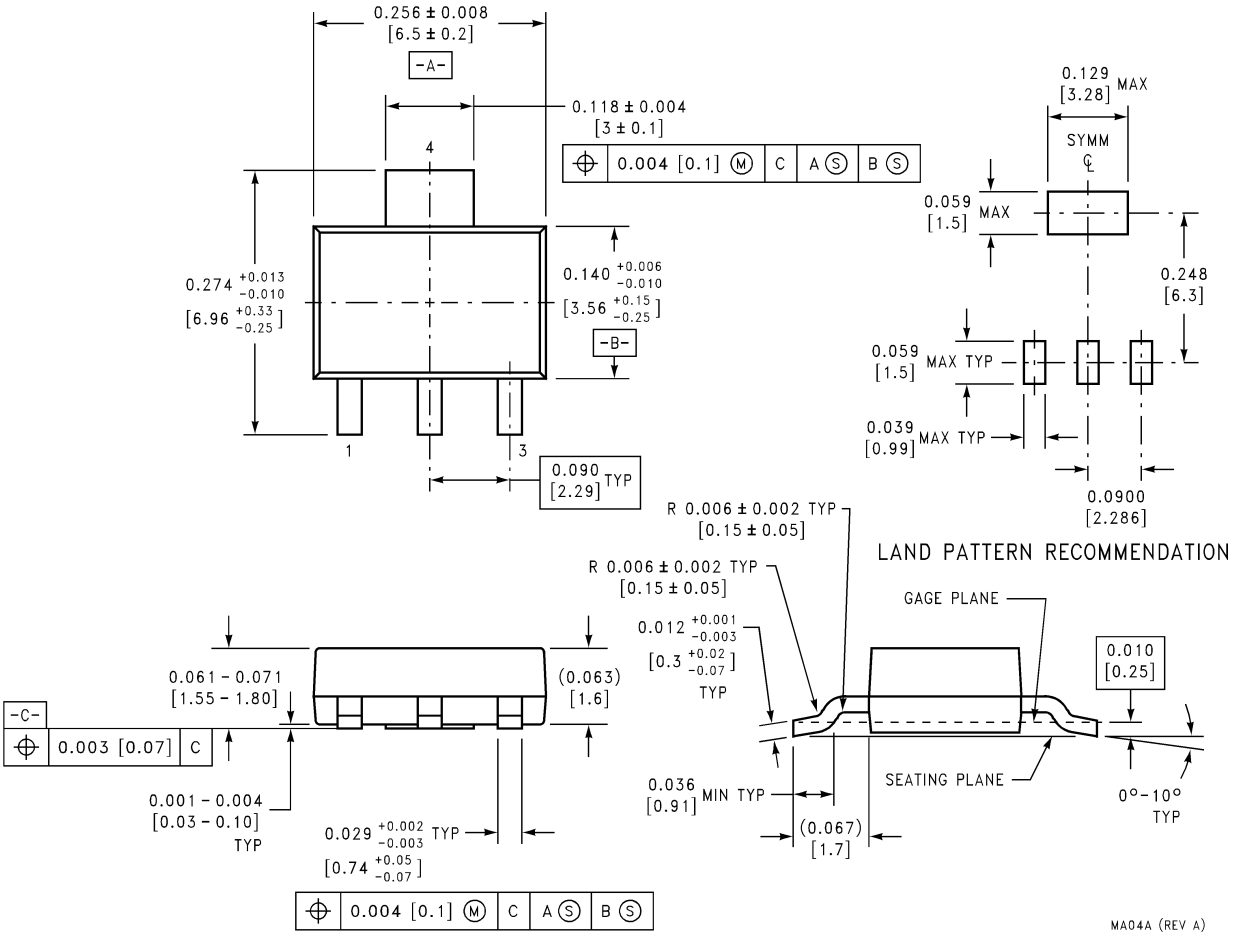

3-Lead SOT-223 Package
Order Part Number LM340MP-5.0
NS Package Number MA04A

LIFE SUPPORT POLICY

NATIONAL'S PRODUCTS ARE NOT AUTHORIZED FOR USE AS CRITICAL COMPONENTS IN LIFE SUPPORT DEVICES OR SYSTEMS WITHOUT THE EXPRESS WRITTEN APPROVAL OF THE PRESIDENT AND GENERAL COUNSEL OF NATIONAL SEMICONDUCTOR CORPORATION. As used herein:

1. Life support devices or systems are devices or systems which, (a) are intended for surgical implant into the body, or (b) support or sustain life, and whose failure to perform when properly used in accordance with instructions for use provided in the labeling, can be reasonably expected to result in a significant injury to the user.
2. A critical component is any component of a life support device or system whose failure to perform can be reasonably expected to cause the failure of the life support device or system, or to affect its safety or effectiveness.

National Semiconductor Corporation
Americas
Email: support@nsc.com

www.national.com

National Semiconductor Europe
Fax: +49 (0) 180-530 85 86
Email: europe.support@nsc.com
Deutsch Tel: +49 (0) 69 9508 6208
English Tel: +44 (0) 870 24 0 2171
Français Tel: +33 (0) 1 41 91 8790

National Semiconductor Asia Pacific Customer Response Group
Tel: 65-2544466
Fax: 65-2504466
Email: ap.support@nsc.com

National Semiconductor Japan Ltd.
Tel: 81-3-5639-7560
Fax: 81-3-5639-7507

National does not assume any responsibility for use of any circuitry described, no circuit patent licenses are implied and National reserves the right at any time without notice to change said circuitry and specifications.

This datasheet has been download from:

www.datasheetcatalog.com

Datasheets for electronics components.